Co-funded by the Erasmus+ Programme of the European Union

RESOR - **R**enewable **E**nergy **So**urces as a Chance for Development for the **R**ural Areas

RESOR PROJECT

Module 4: Solar Thermal Energy

by Bursa Uludağ University

Presentation Content

01 The Sun and Solar Energy & Greenhouse Effect & History

02 Use of Solar Thermal Energy & Small Scale Applications

03 Benefits & Challenges & Environmental Impacts of Using Solar Energy

04 Economics & Case study

Co-funded by the Erasmus+ Programme of the European Union

RESOR - Renewable Energy Sources as a Chance for Development for the Rural Areas

RESOR PROJECT

THE SUN AND SOLAR ENERGY

The gravity of the Sun:
28 times that of Earth

Traps hydrogen from its atmosphere

Hydrogen fuels the fusion reactions

Temperature in the core: 15 million degree Celsius

Hydrogen gas becomes plasma, the fourth state of matter

Source: NASA's Scientific Visualization Studio

THE SUN : Nuclear Fusion

- In plasma, negative electrons in atoms are separated from the positive nuclei
- Hydrogen nuclei fuse to form a helium atom
- Energy is generated : Nuclear Fusion
- Fusion process: two atomic nuclei collide at very high speed and create a new form of nucleus (under extremely high temperature and high density in the sun's core)
- Although the positive charges tend to repel each other, they stay together due to the high temperature and density of the sun's core.

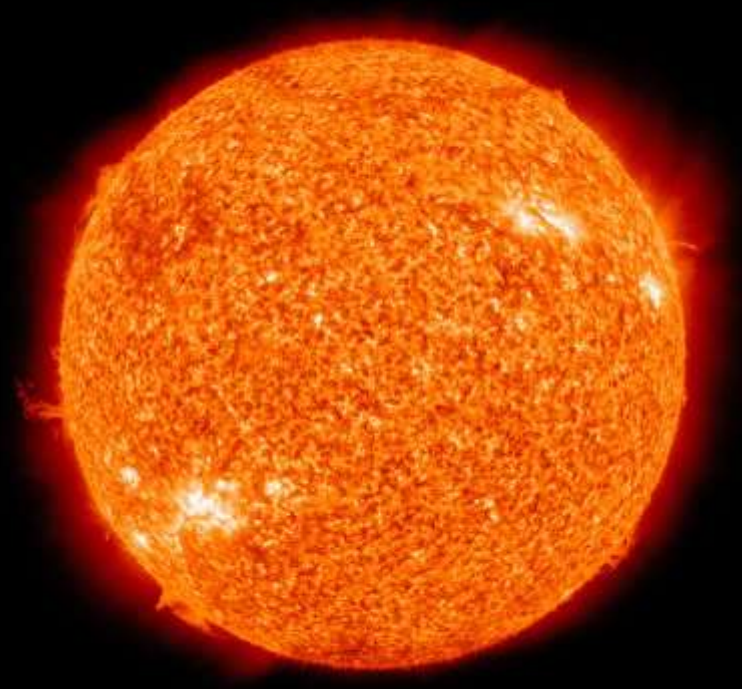

Source: NASA/SDO (AIA) - (Public Domain)

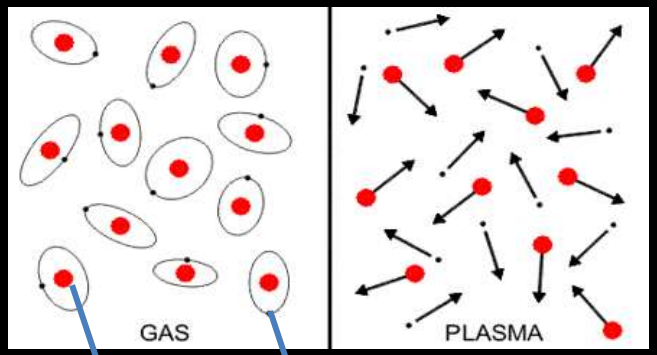

Nucleus

Electrons

Source: Wikipedia - (Public Domain)

THE SUN : Nuclear Fusion

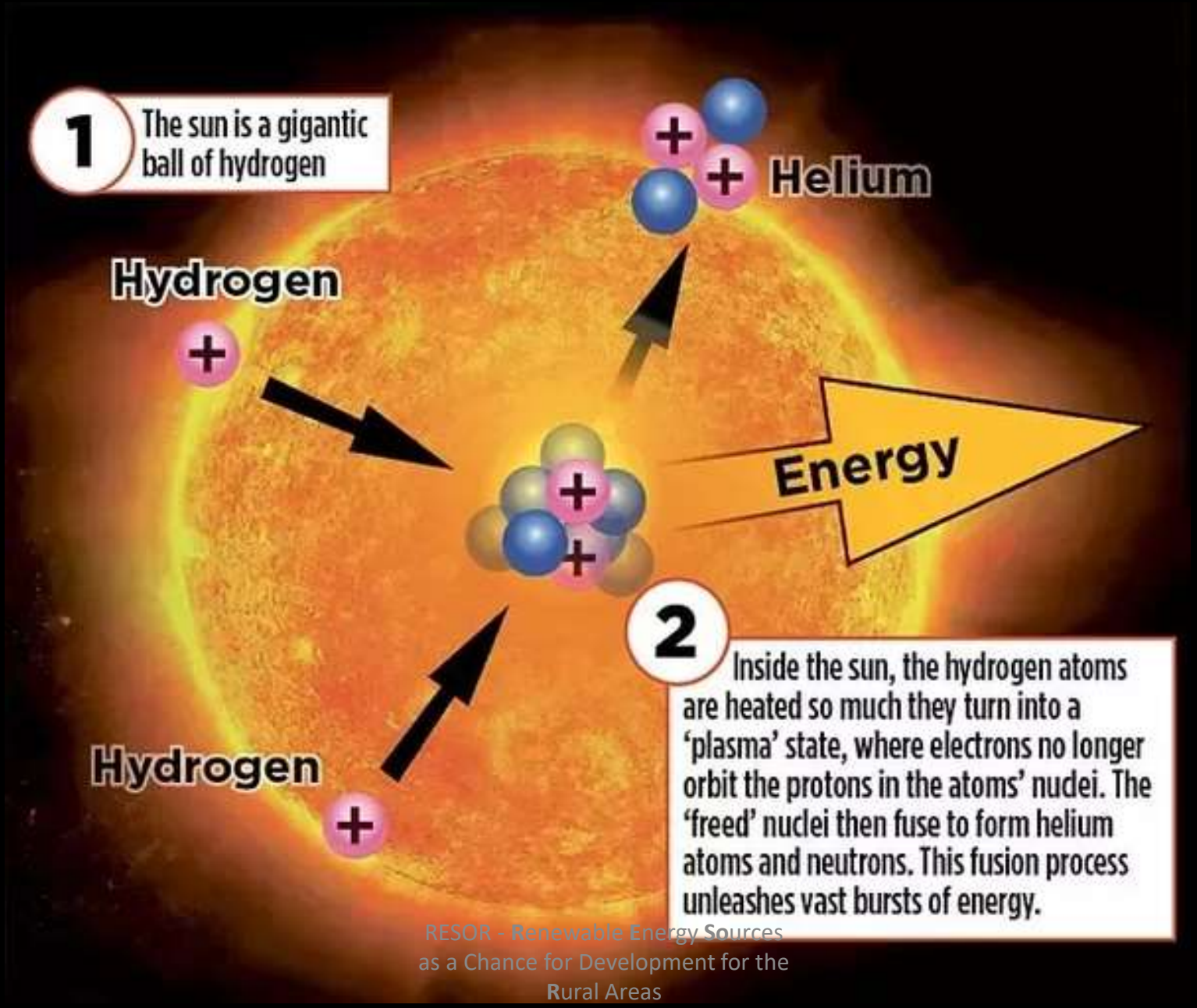

Source: NASA/SDO (AIA) - (Public Domain)

Nuclear Fusion: Proton-proton chain

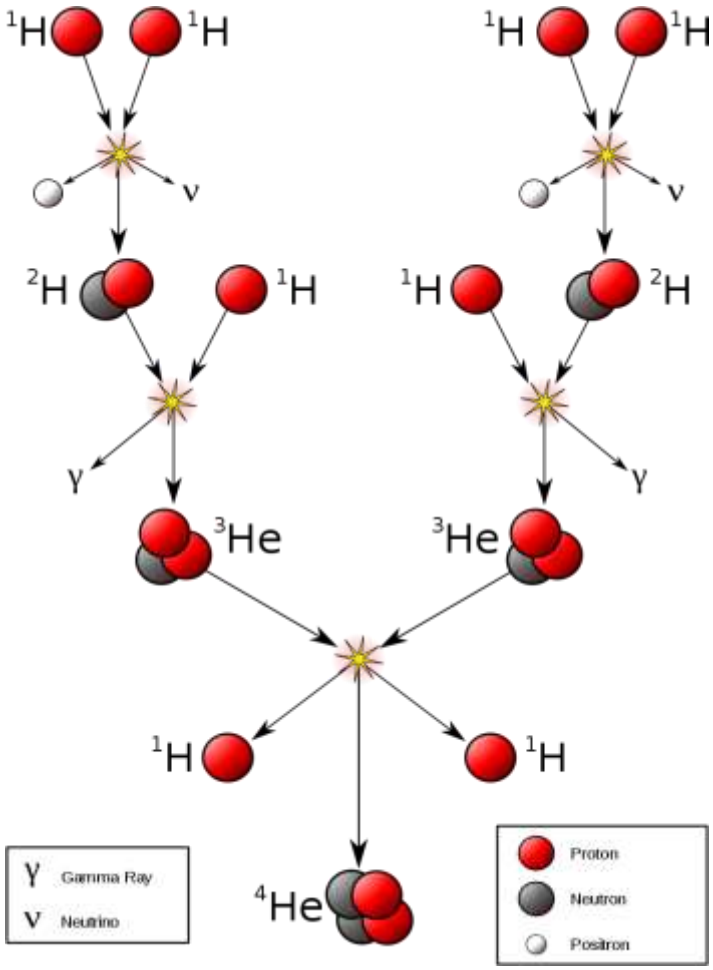

Source: Borb, wikipedia

- **The Sun starts with protons, and through a series of steps, turns them into helium.**
- **Overall, four protons are converted into one helium nucleus.**
- **Energy is released because the helium nucleus has slightly less mass than the original four protons.**
- **The mass difference is converted into energy according to Einstein's equation:**

$$E = mc^2$$

(E: energy, m: mass, and c: speed of light)

- **The radiant energy released travels to the Earth with the speed of light.**

Co-funded by the Erasmus+ Programme of the European Union

RESOR - Renewable Energy Sources as a Chance for Development for the Rural Areas

RESOR PROJECT

Solar Radiation:
Source of Different Types of Energy

- Solar Energy Use
  - Directly
    - Solar Thermal
    - Photovoltaic Devices
    - Ocean Thermal
  - Indirectly
    - Hydropower
    - Wind & wave energy
    - Bioenergy

Co-funded by the Erasmus+ Programme of the European Union

RESOR - Renewable Energy Sources as a Chance for Development for the Rural Areas

RESOR PROJECT

Solar Energy:
Source of many different forms of energy

Hydro power

- around 1/3 of the terrestrial solar energy
- the hydrological cycle
- evaporation and precipitation,
- feeding rivers, which can drive turbines

Wind & wave energy

- temperature differences on the earth's surface
- cause winds and waves
- wind turbines

Bio-energy

- plants convert solar radiation into carbohydrates (photosynthesis),
- which can be used as bio-fuels
- biomass energy
- even fossil fuels

Co-funded by the Erasmus+ Programme of the European Union

RESOR - Renewable Energy Sources as a Chance for Development for the Rural Areas

RESOR PROJECT

Energy Sources that do not depend on solar radiation

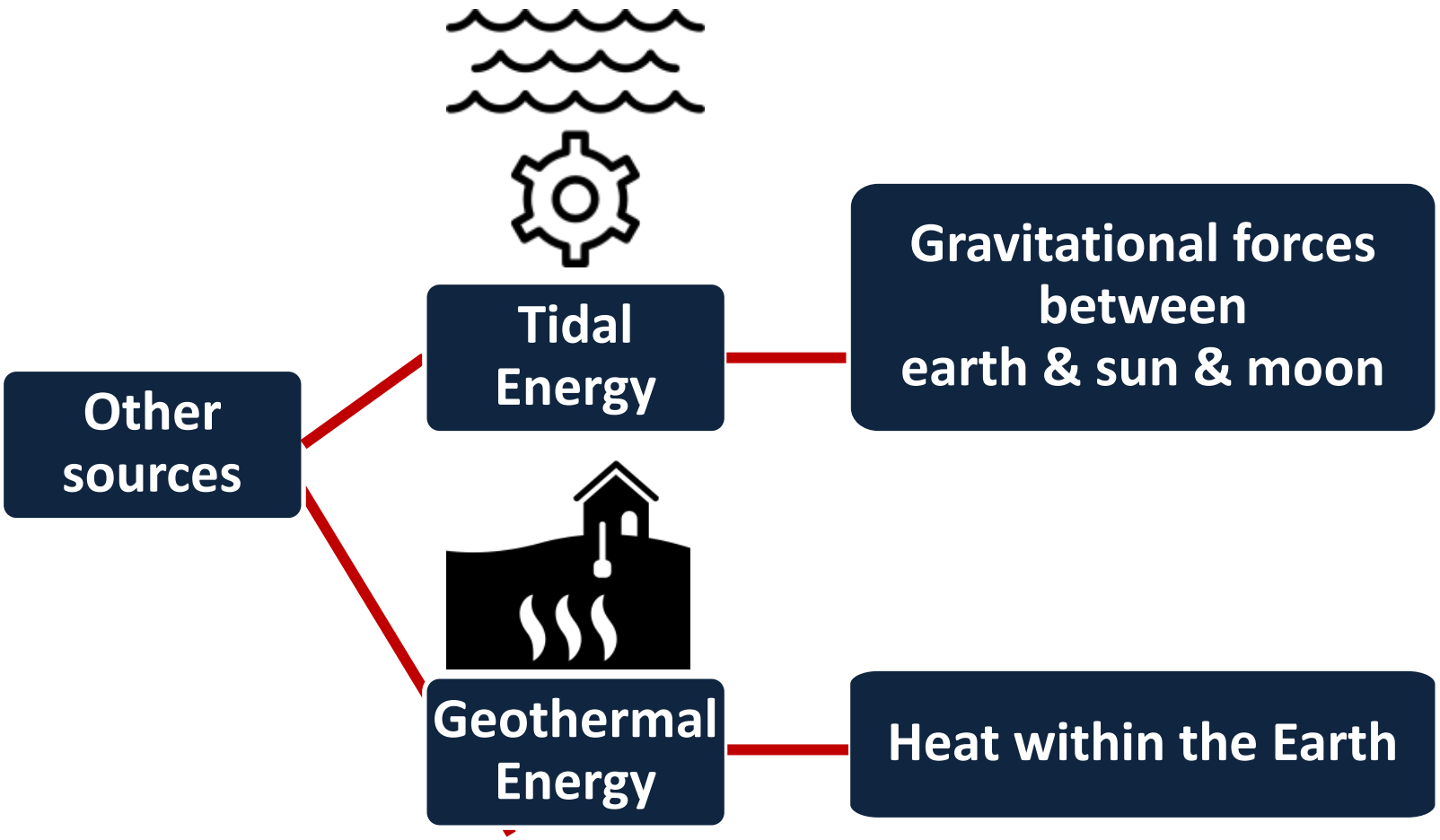

Co-funded by the Erasmus+ Programme of the European Union

RESOR - Renewable Energy Sources as a Chance for Development for the Rural Areas

RESOR PROJECT

30% of the solar radiation that could hit the earth, is reflected back into space by the earth's atmosphere.

Greenhouse gases: water vapor, carbon dioxide, methane, nitrous oxide, ozone, and some artificial chemicals (chlorofluorocarbons- CFCs).

Historical Development

Charles Fritts, an American inventor, describes the first solar cells made from selenium wafers

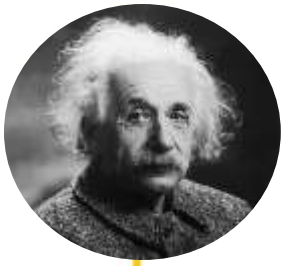

Bell Labs exhibits first high-power silicon PV cell. The New York Times forcasts that solar cells will eventually lead to a source of "limitless energy of the sun"

1839

Experimenting with metal electrodes and electrolyte, nineteen-year-old French physicist Alexandre Edmond Becquerel observes a physical phenomenon allowing light-electricity conversion

1883

1905

Albert Einstein publishes paper on theory behind "photoelectric effect" .

1954م

Co-funded by the Erasmus+ Programme of the European Union

RESOR - **R**enewable **E**nergy **So**urces as a Chance for Development for the **R**ural Areas

RESOR PROJECT

SOLAR ENERGY TECHNOLOGIES

- **Solar energy technologies**
  - **1**
    - Passive
    - Active
  - **2**
    - Thermal
    - Photovoltaic
  - **3**
    - Concentrating
    - Non-concentrating

Co-funded by the Erasmus+ Programme of the European Union

RESOR - Renewable Energy Sources as a Chance for Development for the Rural Areas

RESOR PROJECT

Passive Solar Energy Technologies

- Merely collects energy,
- Convert sunlight into usable energy (in water, air, thermal mass)
- Cause air-movement for ventilating
- Without converting the heat or light into other forms
- Maximizing the use of daylight or heat through building design
- Solar water heating - thermosiphon
- Solar cookers
- Solar chimney
- Solar furnace, etc.

Source: Wikipedia

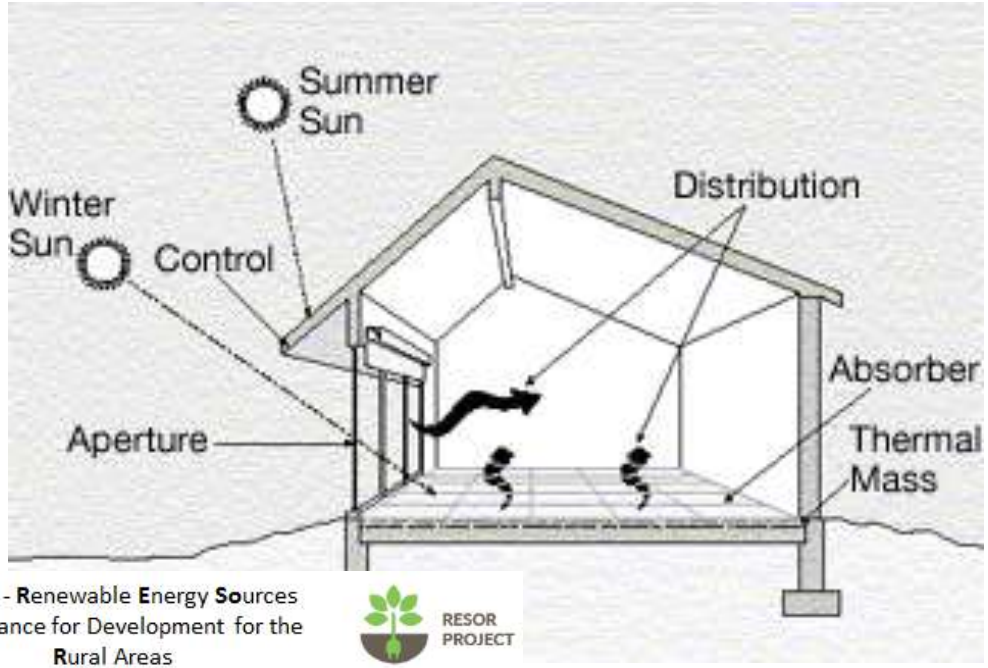

Source: United States Department of Energy

Thermosiphon Solar Water Heaters

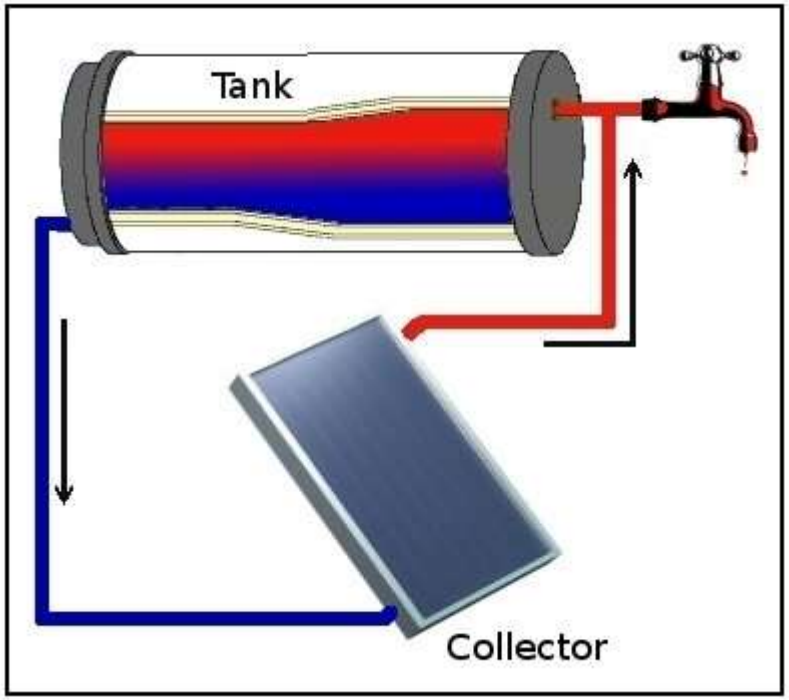

- **A method of passive heat exchange, based on natural convection.**
- **Circulates a fluid without the necessity of a mechanical pump.**
- **Convection moves the heated liquid upwards in the system as it is simultaneously replaced by cooler liquid returning by gravity.**

Active Solar Energy Technologies

- Active technologies
  - Photovoltaic — Converts radiant energy into electricity
  - Solar thermal — Uses solar heat
    - Non- electric
    - Electric

- •Agricultural drying,
- •Solar water heaters,
- •Solar air heaters,
- •Solar cooling systems,
- •Solar cookers

- •Use of solar heat to produce steam for electricity generation (CSP Technologies)

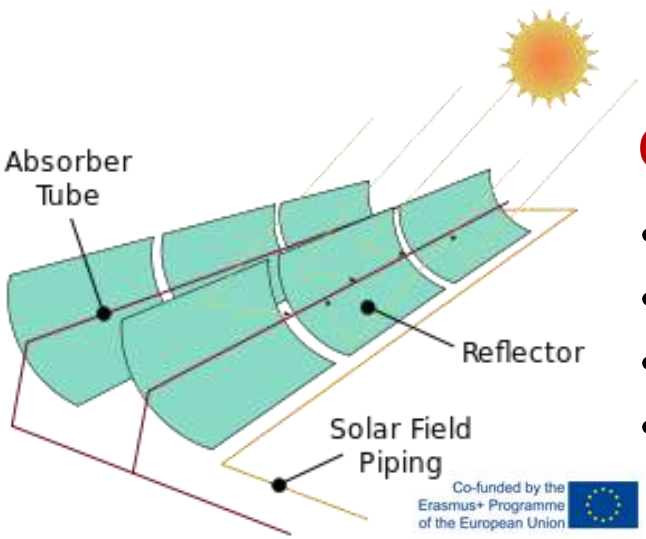

CSP technologies:

- •Parabolic Trough
- •Fresnel Mirror
- •Power Tower
- •Solar Dish Collector

Solar Thermal Collectors

- Capture sunlight and transform it into thermal energy…

- Received solar energy depends on:

  - The time of the day
  - The season of the year
  - The cloudiness of the sky
  - The distance from the Earth's Equator

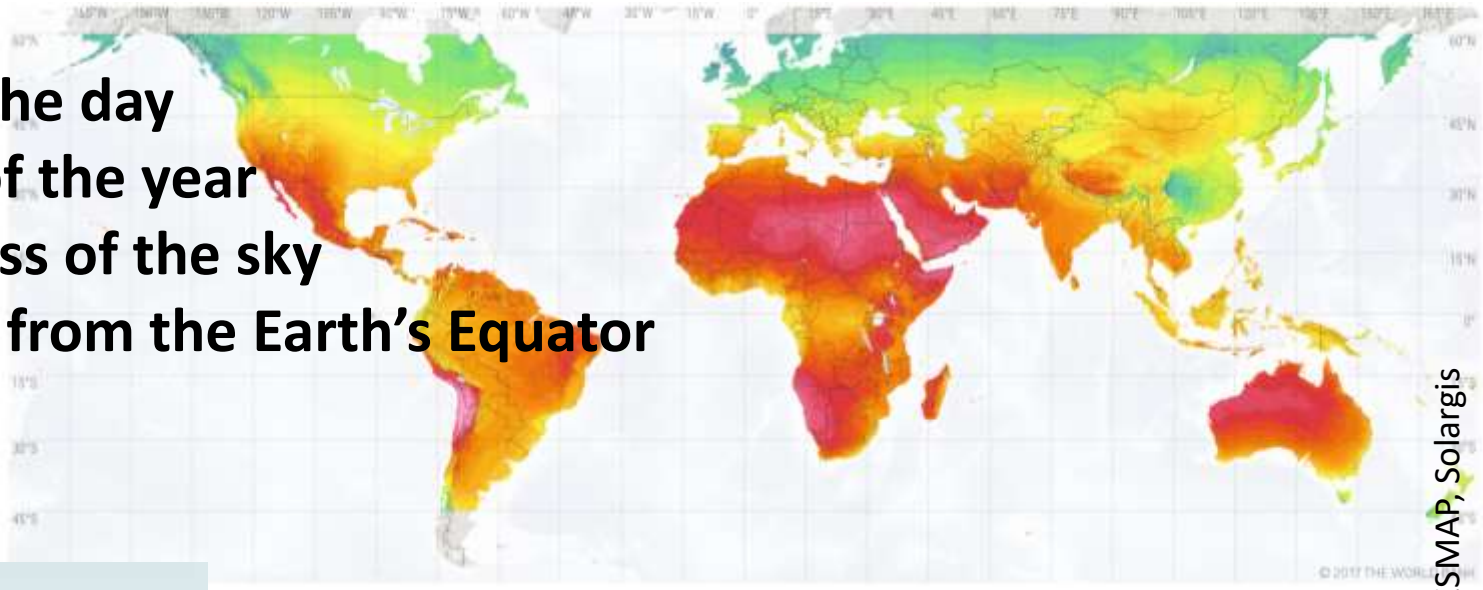

Source: World Bank Group, ESMAP, Solargis

- Commonly refers to a device for solar hot water heating
- May refer to immense power generating installations such as solar parabolic troughs and solar towers or solar air heaters

Solar Thermal Collectors

- Generally mounted on the roof
- Must be very sturdy as they are exposed to different weather conditions
- Can be combined in an array

Solar Thermal Collectors

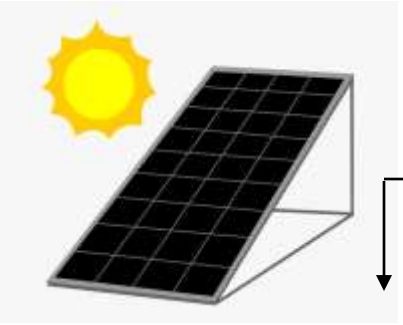

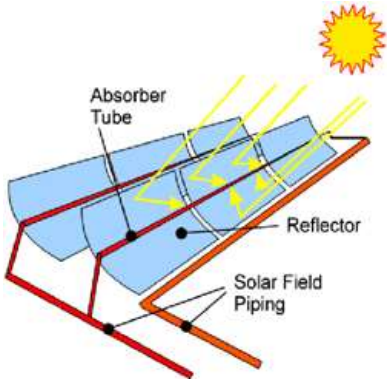

Solar Collectors

Non-concentrating solar collectors

- Flat plate collectors
- Evacuated tube collectors

Concentrating solar collectors

- Compound parabolic concentrator (CPC)
- Parabolic dish
- Parabolic trough
- Solar tower

- Aperture area (i.e., the area that receives the radiation) is roughly the same as the absorber area.
- No extra parts except the collector itself.
- Space heating, water heating etc.
- Residential, commercial etc.

- Concentrating collectors have much bigger aperture than absorber area (additional mirrors etc.)
- Generate electricity by heating a heat-transfer fluid to drive a turbine connected to an electrical generator.

Co-funded by the Erasmus+ Programme of the European Union

RESOR - Renewable Energy Sources as a Chance for Development for the Rural Areas

RESOR PROJECT

Solar Thermal Collectors

Non-concentrating solar collectors

Flat plate collectors

Evacuated tube collectors

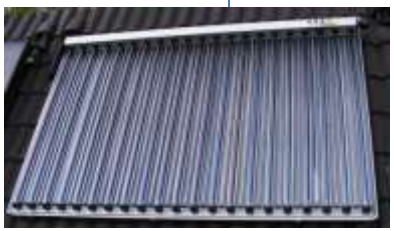

Concentrating solar collectors

Compound parabolic concentrator (CPC)

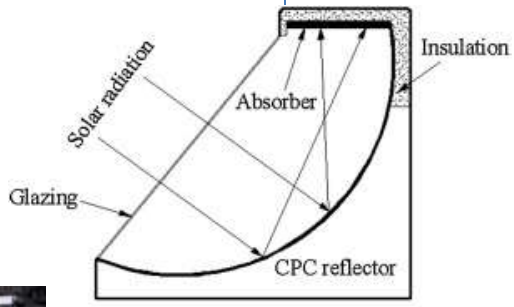

Parabolic dish

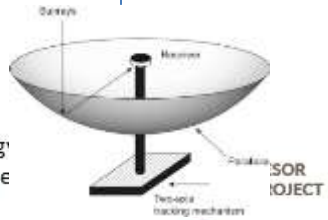

Parabolic trough

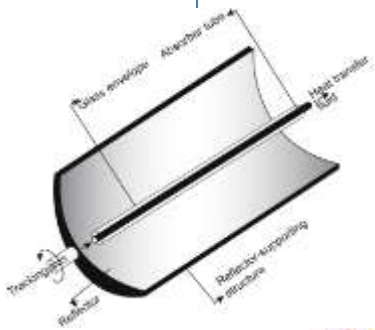

Solar tower

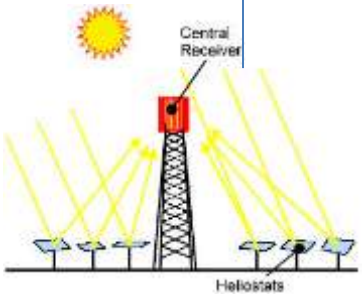

Co-funded by the Erasmus+ Programme of the European Union

RESOR - Renewable Energy as a Chance for Development in Rural Areas

Solar Thermal Collectors

Possible achievable temperatures depending on concentration level

Category	Example	Temperature Range, °C	Efficiency, %
No concentration	Flat-plate Evacuated tube	up to 75 up to 200	30-50
Medium concentration	Parabolic cylinder	150-200	50-70
High concentration	Parabolodial dish	1500 and more	60-75

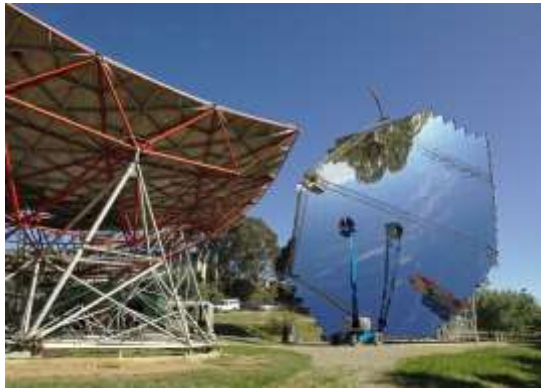

Source: https://commons.wikimedia.org/wiki/File:Flat_plate_glazed_collector.gif

Flat Plate Collectors

- **Typically for temperature requirements up to 75°C**
- **Higher temperatures can be obtained from high-efficiency collectors (their water must be changed to other heat transfer liquids because of its boiling temperature of 100°C).**
- **Two basic types based on heat transfer fluid: liquid heaters and air heaters**

Consists of

1. **an enclosure containing**
2. **a dark-colored absorber plate with fluid circulation passageways,**
3. **a transparent cover to allow transmission of solar energy into the enclosure.**

Source: https://commons.wikimedia.org/wiki/File:Flat_plate_glazed_collector.gif

Flat Plate Collectors

- Solar radiation passes through the transparent cover and hits the absorber plate.
- This plate heats up, transferring the heat to either water or air that is held between the cover and absorber plate.

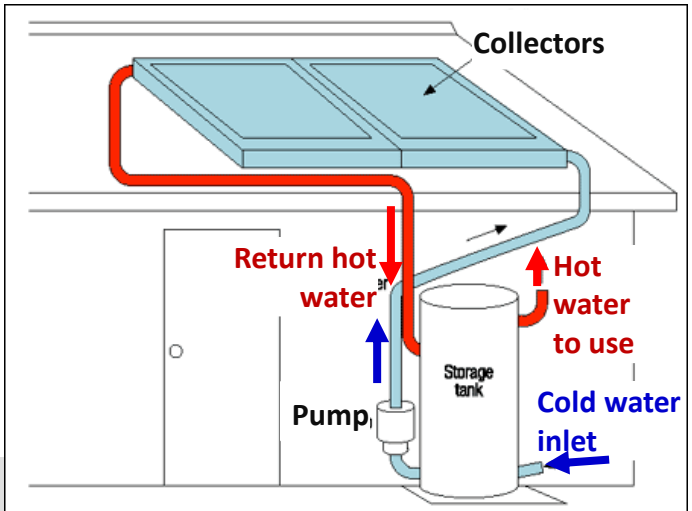

Forced circulation (pumped) system

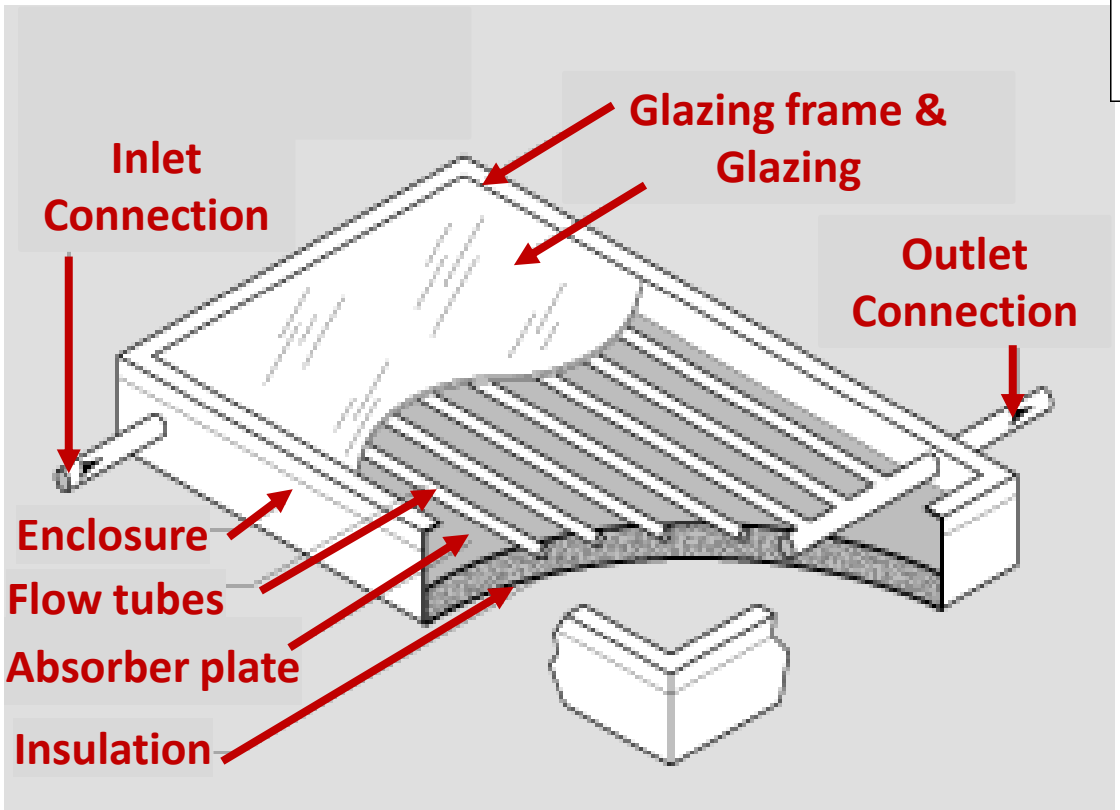

- The sides and back of the enclosure are insulated to reduce heat loss to the ambient.

RESOR - Renewable Energy Sources as a Chance for Development for the Rural Areas

RESOR PROJECT

https://upload.wikimedia.org/wikipedia/commons/4/40/Flat_plate_glazed_collector.gif

Flat Plate Collectors

- **Metal tubes attached to the absorber**
- **Circulation fluid: water or antifreeze-like solution (in cold climates)**
- **Heat transfer fluid is pumped to take the heat from the absorber and transfer the heat to water in a storage tank**
- **If heat transfer fluid is used, a heat exchanger is employed to transfer heat to water in the storage tank.**
- **Most common: Copper tubing to a high conductivity metal sheet (copper or aluminum)**
- **Most common absorber coating: Black enamel paint**
- **Solar air heating systems use fans to move air through flat-plate collectors and into the interior of buildings.**

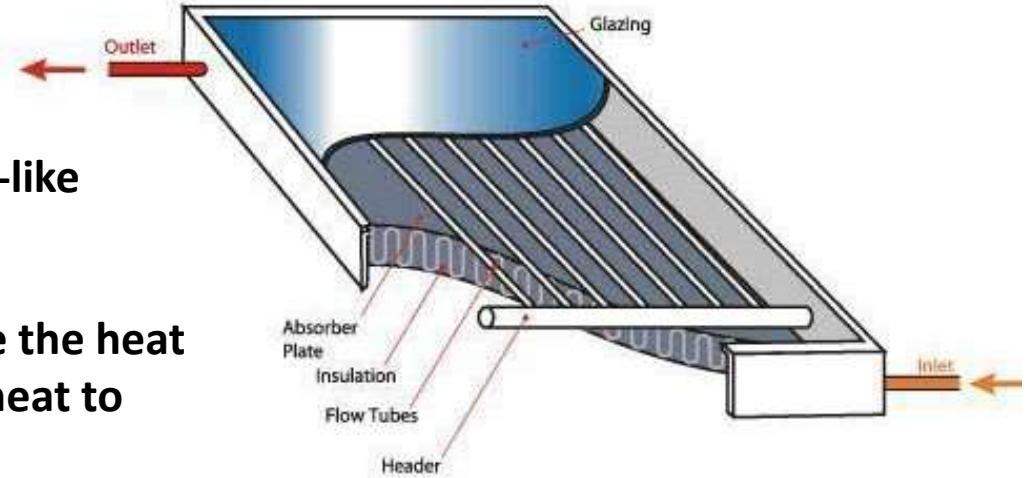

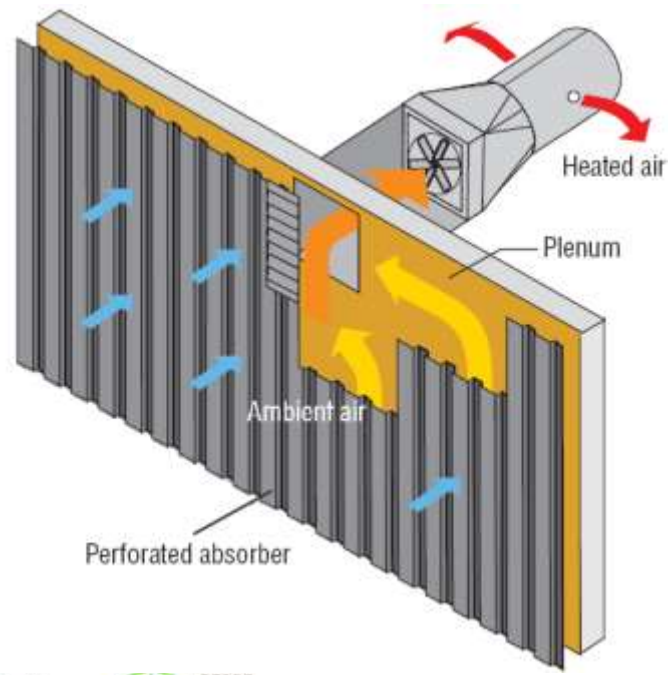

By National Renewable Energy Laboratory - http://www.nrel.gov/docs/fy06osti/29913.pdf, Public Domain, https://commons.wikimedia.org/w/index.php?curid=7962657

Co-funded by the Erasmus+ Programme of the European Union

RESOR - Renewable Energy as a Chance for Development for the Rural Areas

RESOR PROJECT

Evacuated Tube Collectors

- The most common solar thermal technology.
- Glass tubes to surround the absorber with high vacuum.
- The vacuum that surrounds the absorber reduces convection and conduction heat loss.
- High temperatures can occur inside evacuated tubes (special design is required to prevent overheating)

Evacuated Tube Collectors

- A series of evacuated tubes to heat water
- Tubes utilize vacuum or evacuated space between 2 tubes: inner and outer
- Absence of air in the tube creates excellent insulation
- Each tube is made of annealed glass and has an absorber area attached to a fin
- Fin's coating absorbs energy inhibits heat loss
- Vacuum life varies from collector to collector, 5 to 15 years.

Evacuated tube collectors

- **Direct flow (U-type)**
- **Heat pipe**

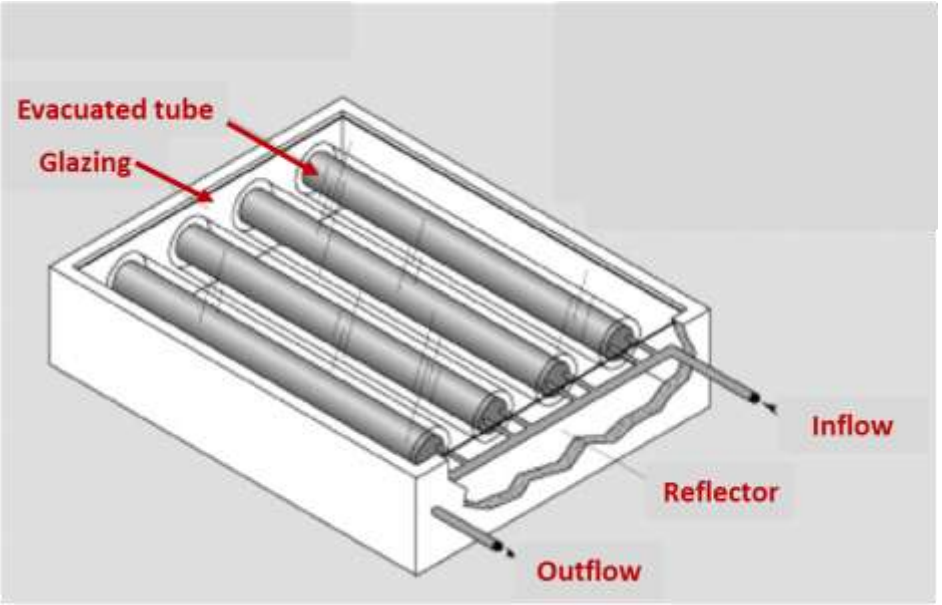

Source: https://upload.wikimedia.org/wikipedia/commons/4/47/Evacuated_tube_collector.gif

Direct-flow evacuated-tube collectors

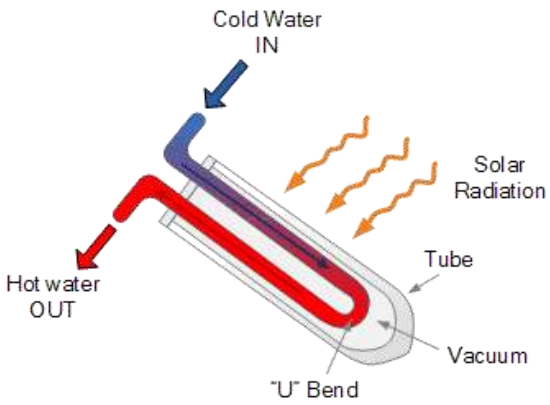

- **Has two pipes that run down and back, inside the tube.**
- **One pipe is for inlet fluid, and the other is for outlet fluid.**
- **They are also known as «U» pipe collectors.**

- **The hollow heat pipes and the flat or curved reflector plate are made out of copper to increase the efficiency.**
- **These collectors are similar in operation to the flat plate collectors, with the exception of the vacuum provided by the outer tube.**

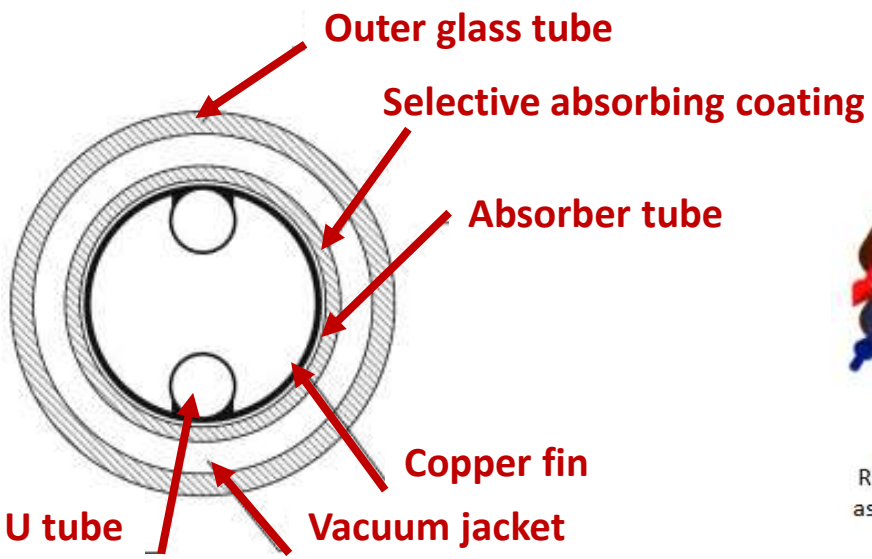

RESOR - Renewable Energy Sources as a Chance for Development for the Rural Areas

RESOR PROJECT

Heat pipe evacuated-tube collectors

- They contain a copper heat pipe, which is attached to an absorber plate, inside a vacuum-sealed solar tube.
- The heat pipe is hollow and the space inside is also evacuated.
- A small amount of liquid, such as alcohol is kept inside the heat pipe.
- The vacuum enables the liquid to boil at lower temperatures than it normal atmospheric pressure.
- When sunlight falls the surface of the absorber, the liquid in the heat tube quickly turns to hot vapor.
- As this gas vapor is now lighter, it rises up to the top portion of the pipe heating it up to a very high temperature.

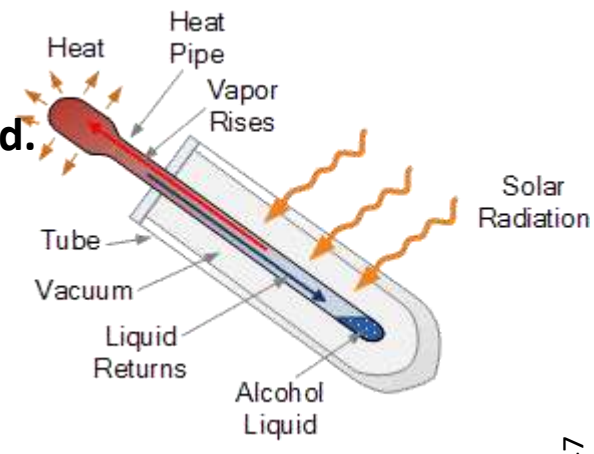

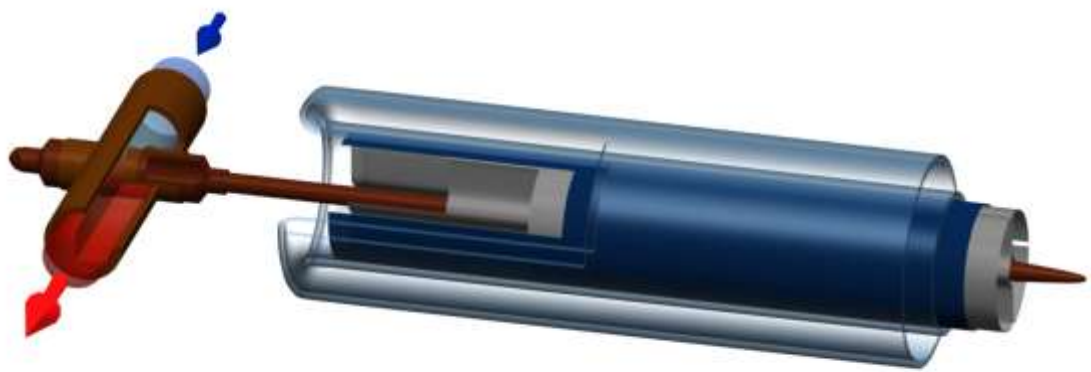

Co-funded by the Erasmus+ Programme of the European Union

RESOR - Renewable Energy Sources as a Chance for Development for the Rural Areas

RESOR PROJECT

Heat pipe evacuated-tube collectors

- **The top part of the heat pipe is connected to a copper heat exchanger called «manifold».**
- **Water or glycol flows through the manifold and picks up the heat.**
- **As the hot vapor in the heat pipe looses energy and cools, it condenses and flows back down the tube to be re-heated.**
- **This process continues as long as the sun shines.**
- **Collectors must be mounted with a minimum tilt angle of around 25° for the internal fluid of the heat pipe to return to the hot absorber at the bottom of the tube.**

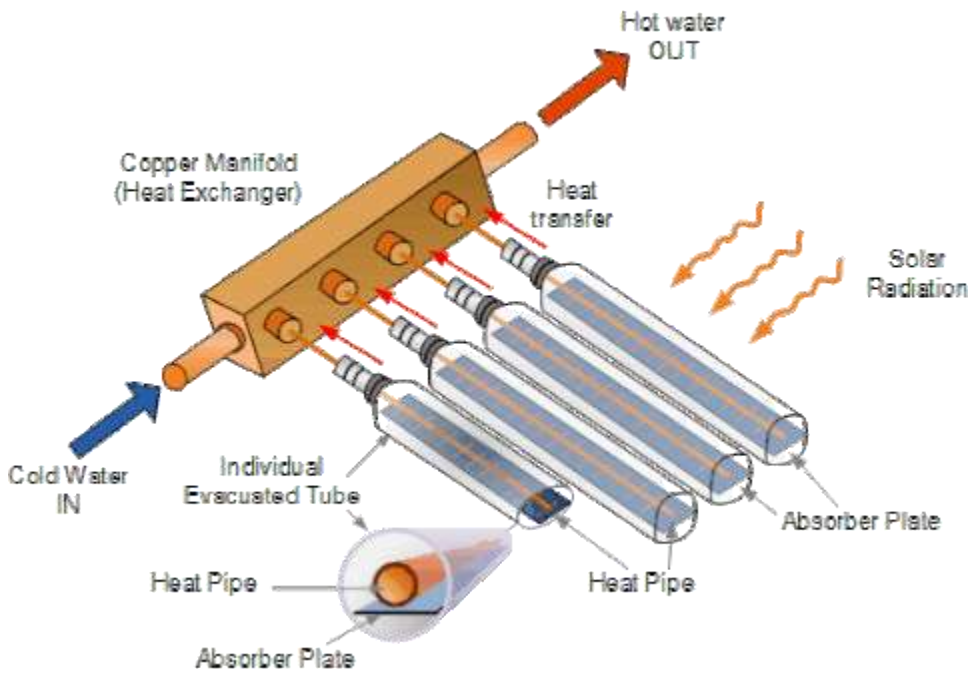

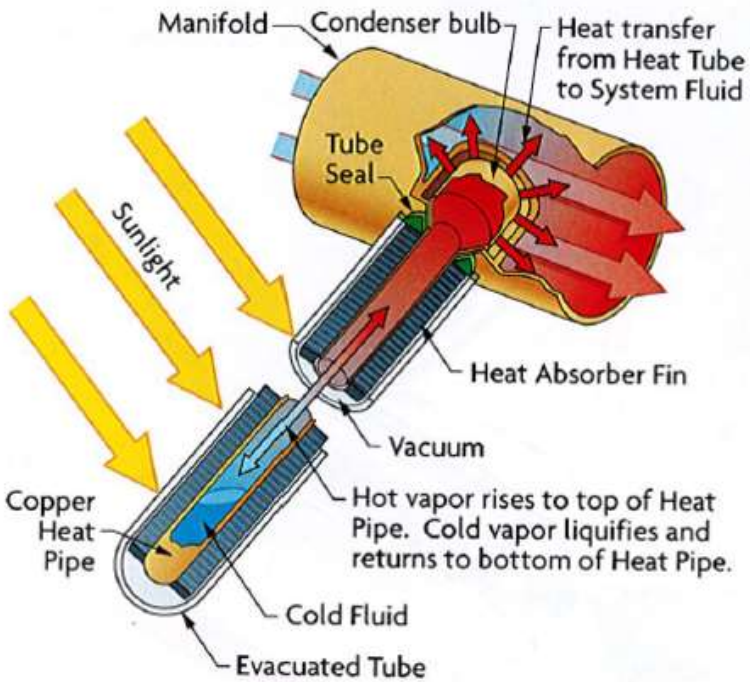

Source: https://hydrosolar.ca/blogs/news/how-do-vacuum-tubes-collector-work

Solar Air Collectors

- **Solar energy is used to heat or condition air for buildings or process heat applications.**
- **Mounted on south-facing vertical walls or roofs.**
- **Solar radiation reaching the collector heats the absorber plate.**
- **The air passing through the collector picks up heat from the absorber plate.**
- **Most often used for space heating.**

Glazed, flat-plate solar thermal air heat collectors, mounted on south facing wall

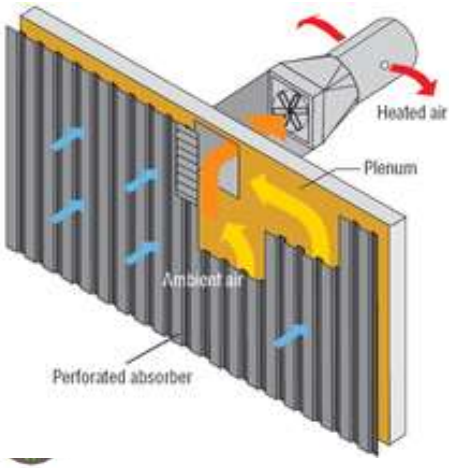

Source: https://en.wikipedia.org/wiki/Solar_air_heat#/media/File:Solar_Air_Heat_Collector.JPG

Concentrator Collector

- **The area intercepting the solar radiation is greater, than the absorber area.**
- **The collector focuses or concentrates solar energy onto an absorber.**
- **Solar thermal power plants use concentrating solar collector systems because they can produce high-temperature heat.**

Source: By USA.Gov - BLM - BUREAU OF LAND MANAGEMENT - http://www.ca.blm.gov/cdd/alternative_energy.html, Public Domain, https://commons.wikimedia.org/w/index.php?curid=15957890

Several Applications of Solar Thermal Energy

- **Solar cooling system**
- **Solar desalination system**
- **Direct solar dryer**
- **Indirect solar dryer**
- **Solar cooker**
- **Solar furnace**

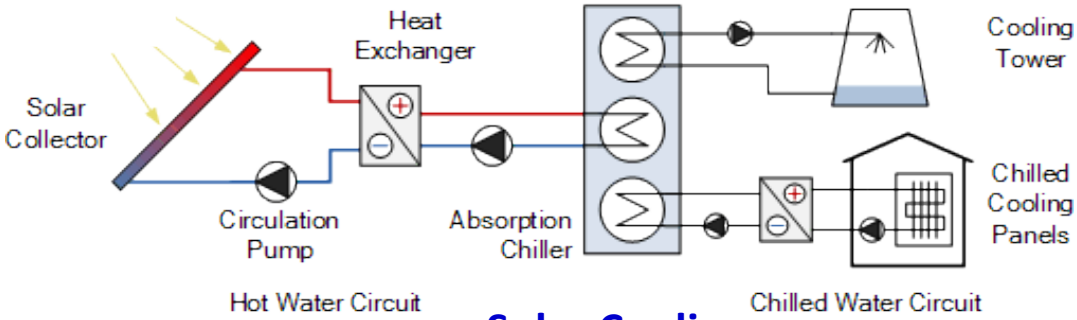

Solar Cooling

Solar Furnace

can reach temperatures up to 3 500 °C

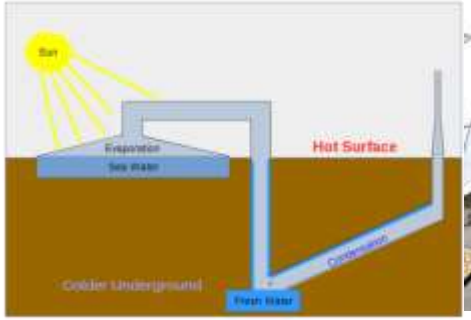

Solar Desalination

Solar Dryer

Solar Cooker

Source: http://www.alternative-energy-tutorials.com/energy-articles/solar-cooling.html
https://www.climatetechwiki.org/technology/jiqweb-edf
By H. Zell - Own work, CC BY-SA 3.0,
https://commons.wikimedia.org/w/index.php?curid=11386331

CHALLENGES

- **Low heat-carrying capacity of heat transfer fluids**
- **Thermal losses and energy storage system issues**
- **High upfront cost, coupled with long payback periods The increasing cost of essential materials like copper Limited rooftop area**
- **Energy requirement and environmental impact of collector manufacture**

BENEFITS

- Renewable,
- Non-polluting,
- Available planet-wide
- Safe, clean, and quiet to operate
- Reliable and require very little maintenance.
- Cost-effective in remote areas
- Flexible and can be expanded to meet increasing demands

Economics of Solar Thermal Energy

Economics depends on the following parameters:

- **the initial cost of system,**
- **maintenance costs,**
- **the lifespan of the system,**
- **the amount and form of energy used,**
- **the concordance between solar energy captured and load,**
- **the cost of the energy consumed using conventional energy and awarded grants**

The cost of a solar heating system

- **with two collectors (flat plate or evacuated tube)**
- **storage tank of 180-liter hot water and 250-liter cold water**

750 USD

Co-funded by the Erasmus+ Programme of the European Union

RESOR - Renewable Energy Sources as a Chance for Development for the Rural Areas

RESOR PROJECT

Case Study: Use of Solar Thermal Energy: Domestic Hot Water and Radiant Floor Heating for a Two Floor House

- **Hot water of 100 liter capacity at 60 ˚C approximate can be delivered by a single collector system of 2 m^2 areas.**

2 m^2 for 100 L water

- **The optimum system configuration for the case of evacuated tube system resulted in 8 collectors using a storage relation of 40 L/m^2 whereas flat plate system resulted in 12 collectors using a storage relation of 50 L/m^2.**

8 collectors

- **The return on investment for the flat plate system was calculated in 9 years, and the evacuated tube system resulted in approximately 11 years.**

ROI: 11 years

Thank You

Co-funded by the Erasmus+ Programme of the European Union

RESOR - **R**enewable **E**nergy **So**urces as a Chance for Development for the **R**ural Areas

RESOR PROJECT